Strojírenský zkušební ústav, s.p.
Engineering Test Institute, Public Enterprise
Hudcova 424/56b, Medlánky, 621 00 Brno, Czech Republic
Notified Body 1015

CERTIFICATE OF CONSTANCY OF PERFORMANCE

Number: **1015-CPR-E-30-00602-16-rev. 2**

In compliance with Regulation (EU) No 305/2011/EU of the European Parliament and of the Council of 9 March 2011 (the Construction Products Regulation or CPR), this Certificate applies to the construction product:

Corrugated safety metal hose assemblie s for the connection of domestic appliances using gaseous fuels

Corrugated safety metal hose assemblies serve as flexible elements in gas conduits, inserted between a gas supply fitting or branch of a quick disconnect device and the appliance connection point. The hoses are suitable for the connection of domestic appliances indoors and outdoors **installed in areas where the regulations require reaction to fire**. The hoses are suitable for areas with regulated reaction to fire (the hoses comply with Euroclass C – s2, d2 according to EN 13501-1:2018).

Product type:	**N-GAS** see Pages 2 up to 7
Parameters of the construction product:	see Page 2
Placed on the market under the name or trademarks of:	**Ayvaz N Ltd.** 84 Ahinora str. 7400 Isperih, Razgrad province BULGARIA
And produced in the manufacturing plant:	**Ayvaz N Ltd.** 84 Ahinora str. 7400 Isperih, Razgrad province BULGARIA

This Certificate attests that all provisions concerning the assessment and verification of constancy of performance described in Annex ZA of the standard

EN 14800:2007

under System 1 for the performance set out in this Certificate are applied and that the factory production control at the Manufacturer's plant ensures constancy of performance of the construction product.

This Certificate was first issued on **2016-05-31** and will remain valid as long as neither the harmonised standard, the construction product, the methods of assessment and verification of constancy of performance nor the manufacturing conditions in the plant are modified significantly, unless suspended or withdrawn by the notified product certification body.

Basis of Certificate issuance: Final Report 30-16998/MZ of 2024-06-04

Brno, 2024-06-11

NOTIFIED BODY 1015 STROJÍRENSKÝ ZKUŠEBNÍ ÚSTAV, s.p. CZ

.....
Ing. Aleš Onderek
Representative of Notified Body

Specification of the product - Basic technical data:

Type designation:	N-GAS					
Art. code:	**701.150.151.050**	**701.150.151.075**	**701.150.151.100**	**701.150.151.125**	**701.150.151.150**	**701.150.151.200**
Fittings construction:	insert and cap nut (G 1/2), bolt (R 1/2) according to national usance – EN 14800:2007 Annex A					
Art. code:	**701.150.152.050**	**701.150.152.075**	**701.150.152.100**	**701.150.152.125**	**701.150.152.150**	**701.150.152.200**
Fittings construction:	insert and cap nut (G 1/2), insert and cap nut (G 1/2) according to national usance – EN 14800:2007 Annex A					
Art. code:	**701.150.153.050**	**701.150.153.075**	**701.150.153.100**	**701.150.153.125**	**701.150.153.150**	**701.150.153.200**
Fittings construction:	plug DN 12, fixed nut (Rp 1/2) according to national usance – EN 14800:2007 Annex A					
Art. code:	**701.150.160.050**	**701.150.160.075**	**701.150.160.100**	**701.150.160.125**	**701.150.160.150**	**701.150.160.200**
Fittings construction:	insert and cap nut (G 1/2), fixed nut (Rp 1/2) according to national usance – EN 14800:2007 Annex A					
Max. operating pressure:	MOP 0.5					
Nominal diameter:	DN 12					
Hose construction:	type 1 acc. to EN 14800:2007					
Operating medium:	first, second and third class gases according to EN 437:2021					
Class of reaction to fire:	C – s2, d2					
Operating temperature:	up to +60 °C					
Bellows thickness:	0.15 mm					
Design of fittings:	welded fittings					
Pressing method:	VERSION-1 and VERSION -2					
Hose assembly lengths:	500 mm	750 mm	1000 mm	1250 mm	1500 mm	2000 mm
Material:	- bellows: stainless steel AISI 304L (1.4306) - braiding: stainless steel AISI 304 (1.4301), 0.3 mm thick, number of wires braided 3 pieces - cap nut: stainless steel AISI 304 (1.4301) – thread acc. to EN ISO 228-1:2003 - bolt: stainless steel AISI 304 (1.4301) – thread acc. to EN 10226-1:2004 - plug DN 12: stainless steel AISI 304 (1.4301), brass CW614N (CuZn40Pb2) – acc. to DIN 3383-1 - fixed nut: stainless steel AISI 304 (1.4301) - thread acc. to EN 10226-1:2004 - insert: stainless steel AISI 304 (1.4301) - ring: stainless steel AISI 304 (1.4301) - sheathing: softened PVC, type EKP-12 (transparent) a EKP-19 (yellow) - flat gasket: KNB 110-1					

Note:
The usage and installation requirements for the products in question are limited by generally binding national regulations, technical standards (e.g. EN 1775 ed.2:2007) and regulatory requirements of the relevant country (e.g. TPG 70401).



Strojírenský zkušební ústav, s.p., Hudcova 424/56b, 621 00 Brno, Česká republika
Engineering Test Institute, public enterprise, Hudcova 424/56b, 621 00 Brno, Czech Republic
www.szutest.cz

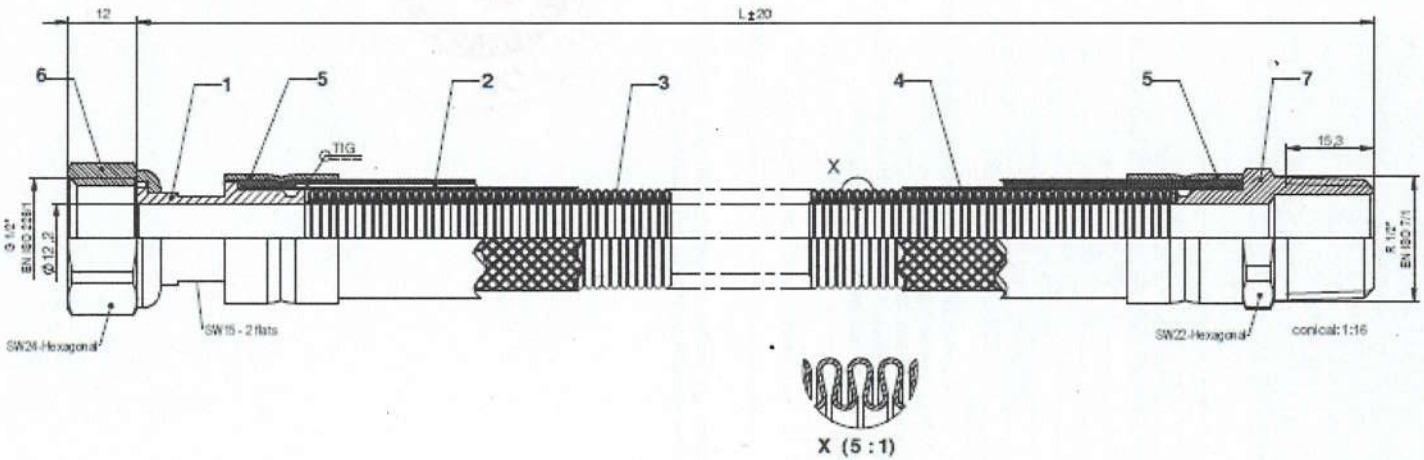

X (5 : 1)

L	Product no
500	701.150.151.050
750	701.150.151.075
1000	701.150.151.100
1250	701.150.151.125
1500	701.150.151.150
2000	701.150.151.200

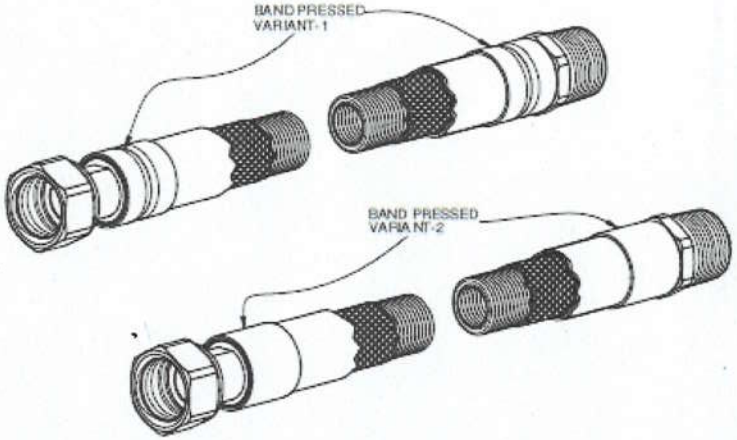

ITEM	QTY	PART NAME	MATERIAL	SIZE	DRAWING NO	EXPLANATION
7	1	Nipple	Stainless Steel	1/2"x12	601.619.NPL.10	
6	1	Nut	Stainless Steel M08	1/2"	601.SMN.001.002	
5	2	Band	Stainless Steel	DN12	601.080.100.265	
4	1	Braid	Stainless Steel	0,30x3	601.310.101.014	
3	1	Hose	Stainless Steel	DN12	601.009.4.15.047	
2	1	Cover	Special	Special	[illegible]	
1	1	Internal part	Stainless Steel	1/2"x12	601.619.ICP.10	

	Name	Date	Signature	Scale
Drawer	Y.DENZ	22.11.2023		-
Control	I.COŞAR			
Approval	S.YAVUZ			

Part Name	EN 14800 - TYPE 1 NATURAL GAS - DN12 - MF
Product Type	
Customer Code	
Firm Drawing No	-

Material	Qty.	Weight
-	-	-

АЙВАЗ

Standard and Tolerances For Linear and angular dimensions without individual tolerance indications — EN 22768-1 / ISO 2768-m

Standard and Geometrical tolerances for features without individual tolerance indications — EN 22768-2 / ISO 2768-K

Item No	-
CAD No	-
Rev.No	4

Do Not Take Measurements From The Drawing

NOTIFIED BODY 1015 STROJÍRENSKÝ ZKUŠEBNÍ ÚSTAV, s.p. NB-CPR/H-0126 CZ

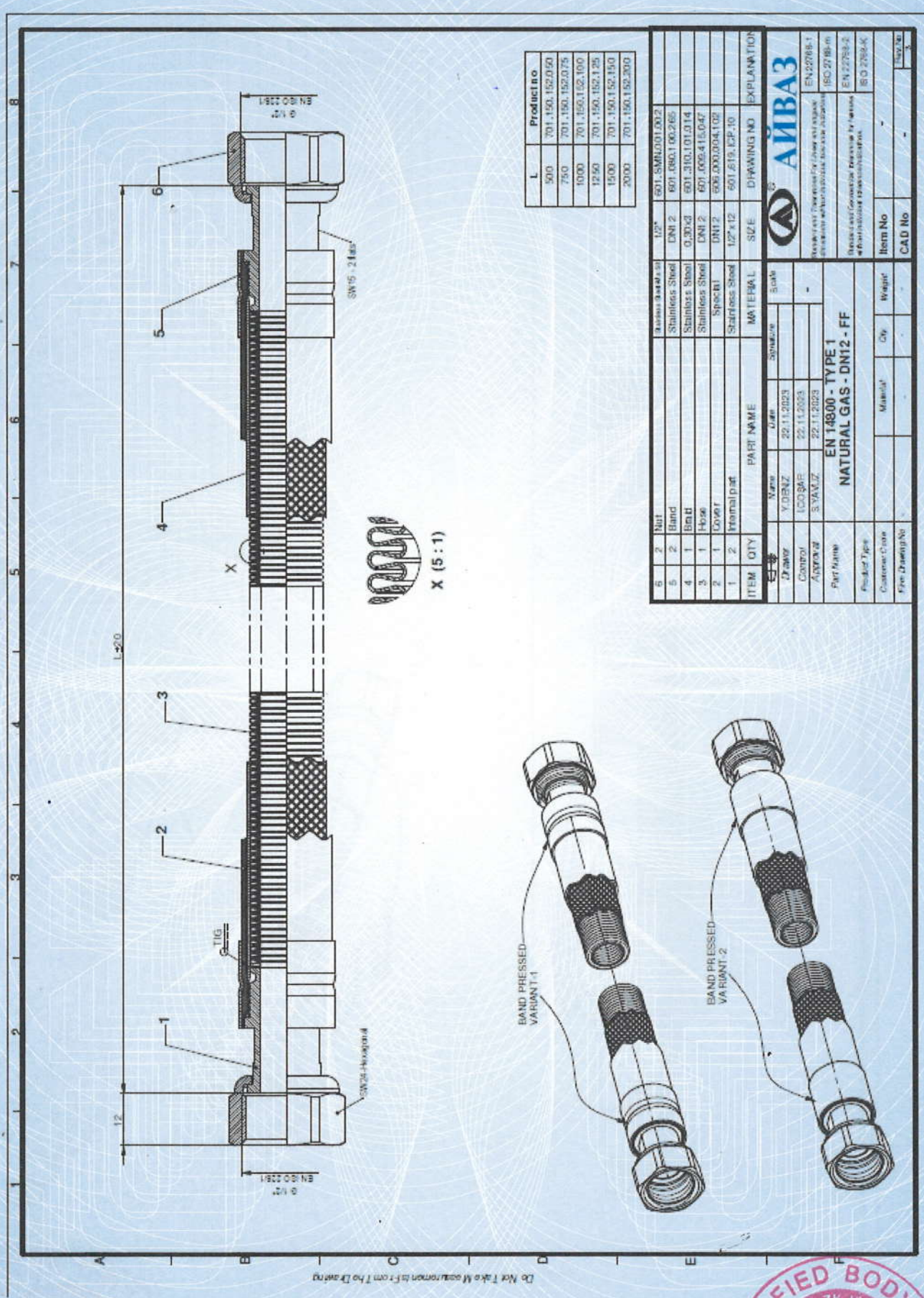

Strojírenský zkušební ústav, s.p., Hudcova 424/56b, 621 00 Brno, Česká republika
Engineering Test Institute, public enterprise, Hudcova 424/56b, 621 00 Brno, Czech Republic
www.szutest.cz

NOTIFIED BODY 1015
STROJÍRENSKÝ ZKUŠEBNÍ ÚSTAV, s.p.
NB-CPR/14-612/5
CZ

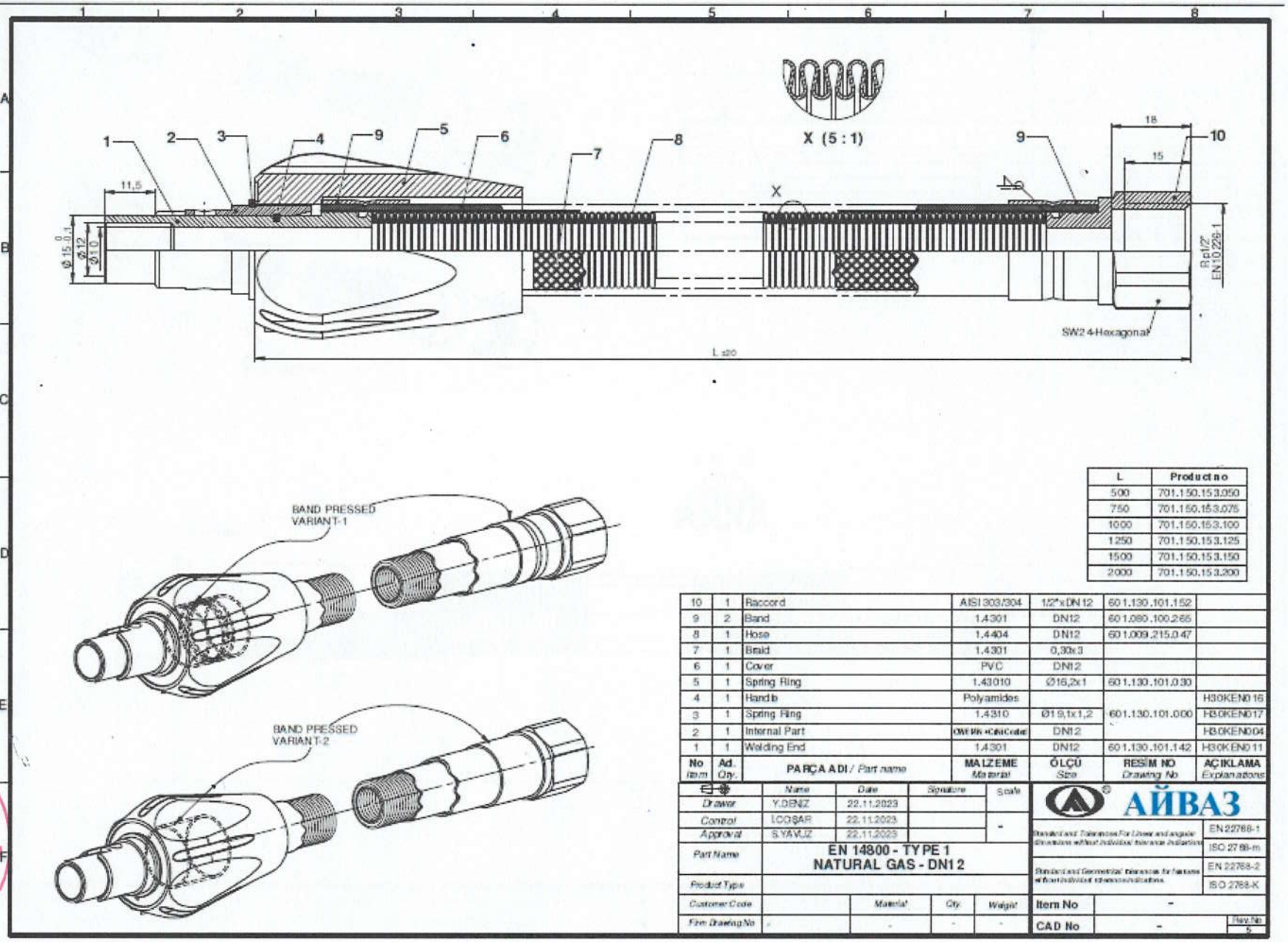

L	Product no
500	701.150.153.050
750	701.150.153.075
1000	701.150.153.100
1250	701.150.153.125
1500	701.150.153.150
2000	701.150.153.200

No Item	Ad. Qty.	PARÇA ADI / Part name	MALZEME Material	ÖLÇÜ Size	RESİM NO Drawing No	AÇIKLAMA Explanations
10	1	Raccord	AISI 303/304	1/2"x DN12	601.130.101.152	
9	2	Band	1.4301	DN12	601.080.100.265	
8	1	Hose	1.4404	DN12	601.009.215.047	
7	1	Braid	1.4301	0,30x3		
6	1	Cover	PVC	DN12		
5	1	Spring Ring	1.43010	Ø16,2x1	601.130.101.030	
4	1	Handle	Polyamides		601.130.101.000	H30KEN016
3	1	Spring Ring	1.4310	Ø19,1x1,2		H30KEN017
2	1	Internal Part	[illegible]	DN12		H30KEN004
1	1	Welding End	1.4301	DN12	601.130.101.142	H30KEN011

	Name	Date	Signature	Scale
Drawer	Y.DENİZ	22.11.2023		
Control	İ.COŞAR	22.11.2023		-
Approval	S.YAVUZ	22.11.2023		

Part Name	EN 14800 - TYPE 1 NATURAL GAS - DN12
Product Type	
Customer Code	
Firm Drawing No	-

Material	Qty.	Weight
-	-	-

АЙВАЗ

Standard and Tolerances For Linear and angular dimensions without individual tolerance indications — EN 22768-1 / ISO 2768-m

Standard and Geometrical Tolerances for features without individual tolerance indications — EN 22768-2 / ISO 2768-K

Item No	-
CAD No	-
Rev.No	5

NOTIFIED BODY 1015 STROJÍRENSKÝ ZKUŠEBNÍ ÚSTAV, s.p. NB-CPR/14-612/5 CZ

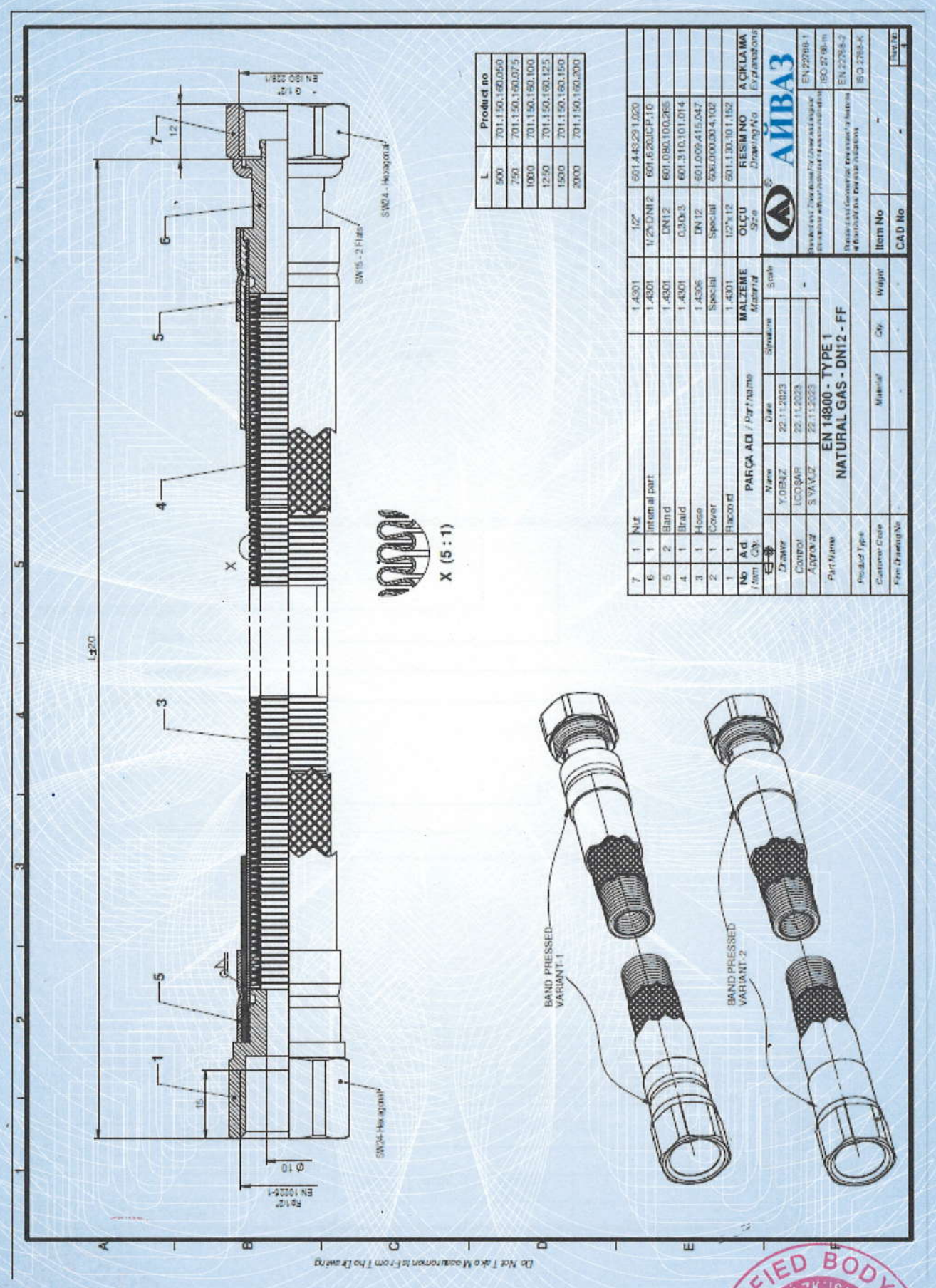

L	Product no
500	701.150.160.050
750	701.150.160.075
1000	701.150.160.100
1250	701.150.160.125
1500	701.150.160.150
2000	701.150.160.200

No	A.d. Item Qty.	PARÇA ADI / Part name	MALZEME Material	ÖLÇÜ Size	RESİM NO Drawing No	AÇIKLAMA Explanations
7	1	Nut	1.4301	1/2"	601.443.291.020	
6	1	Internal part	1.4301	1/2"-DN12	601.620.IÇP.10	
5	2	Band	1.4301	DN12	601.080.100.285	
4	1	Braid	1.4301	0,30x3	601.310.101.014	
3	1	Hose	1.4306	DN12	601.009.415.047	
2	1	Cover	Special	Special	636.000.004.102	
1	1	Raccord	1.4301	1/2"x12	601.130.101.152	

	Name	Date	Signature	Scale
Drawer	YDENİZ	22.11.2023		
Control	LCOŞAR	22.11.2023		-
Approval	S.YAVUZ	22.11.2023		

Part Name	EN 14800 - TYPE 1 NATURAL GAS - DN12 - FF
Product Type	
Customer Code	
Item Drawing No	

Standard Dimensions and Designs	EN 22768-1 ISO 2768-m
Standard Dimensions and Designs	EN 22768-2 ISO 2768-K
Item No	-
CAD No	-

Strojírenský zkušební ústav, s.p., Hudcova 424/56b, 621 00 Brno, Česká republika
Engineering Test Institute, public enterprise, Hudcova 424/56b, 621 00 Brno, Czech Republic
www.szutest.cz
NOTIFIED BODY 1015 STROJÍRENSKÝ ZKUŠEBNÍ ÚSTAV, s.p. CZ
NB-CPR/14-612

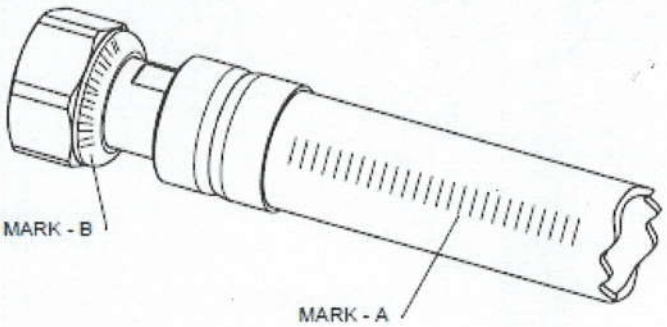

MARK -A

EN 14800- Type 1 - NATURAL GAS- CE 1015 - DN12 - Pmax : 0,5 Bar

- PRESSURE
- DIAMETER
- NOTIFIED BODY NUMBER
- GAS TYPE
- CMG HOSE TYPE
- NORM NUMBER

MARK -B

NGAS 13 / 42

- LOT NUMBER
- YEAR OF MANUFACTURE
- GAS TYPE

AYVAZ-CAD / Resim Üzerinden Ölçü Almayınız.
AYVAZ-CAD/ Do Not Take Measurements From The Drawing

	İsim / *Name*	Tarih / *Date*	İmza/*Signature*	Ölçek *Scale*
Çizen / *Drawer*	A.SEZGİN	12.02.2016		
Kontrol / *Control*	E.ÖZKAN	12.02.2016		
Onay / *Approval*	İ.COŞAR	12.02.2016		
Parça Adı *Part Name*	MARKING DETAIL			
Ürün Tipi *Product Type*				
Müşteri Kodu *Customer Code*		Malzeme *Material*	Miktar *Qty.*	Ağırlık *Weight*
Firma Resim No *Firm Drawing No*				

АЙВАЗ

Toleransı ve standartı verilmemiş uzunluk ve açı ölçüleri için toleranslar. *Standard and Tolerances For Lineer and angular dimensions without individual tolerance indications*	EN 22768-1
	ISO 2768-m
Toleransı ve standartı verilmemiş şekil ve konumlar için geometrik toleranslar. *Standard and Geometrical tolerances for features without individual tolerance indications.*	EN 22768-2
	ISO 2768-K
Item No	
CAD No	H02148045
Rev.No	0

NOTIFIED BODY 1015
STROJÍRENSKÝ ZKUŠEBNÍ ÚSTAV, s.p.
CZ 1
NB-CPR/14-612/5